Sonda DriL

TIGER
DTH HAMMERS

WHY CHOOSE TIGER?

Sondadril has proven itself and the quality of all the DTH Hammers manufactured in the last 15 years, by achieving the sales of over 7,000 hammers in Brazil, becoming the leading manufacturer in the country.

Our DTH Hammers' Tiger line comes to the USA to prove itself again as the most cost-effective hammer, promising to compete in the same level as all other well-known manufacturers and exceeding all customers' expectations in the Mining, Quarries, Construction and Water Well industries.

BENEFITS

- We offer a great variety of the most used bit shanks Hammers ranging from 3" to 10": SD, QL, DHD, Mission, CIR, and BR.
- Triple lead threads for better coupling
- All components are designed to achieve the best longevity possible, with a very rigorous manufacturing process in all stages
- The Lowest price in the market will keep your costs down while you achieve high productivity and higher profits.

sales.usa@sondadril.com.br

www.sondadril.com

@sondadril

TIGER BR3 - DTH Hammer

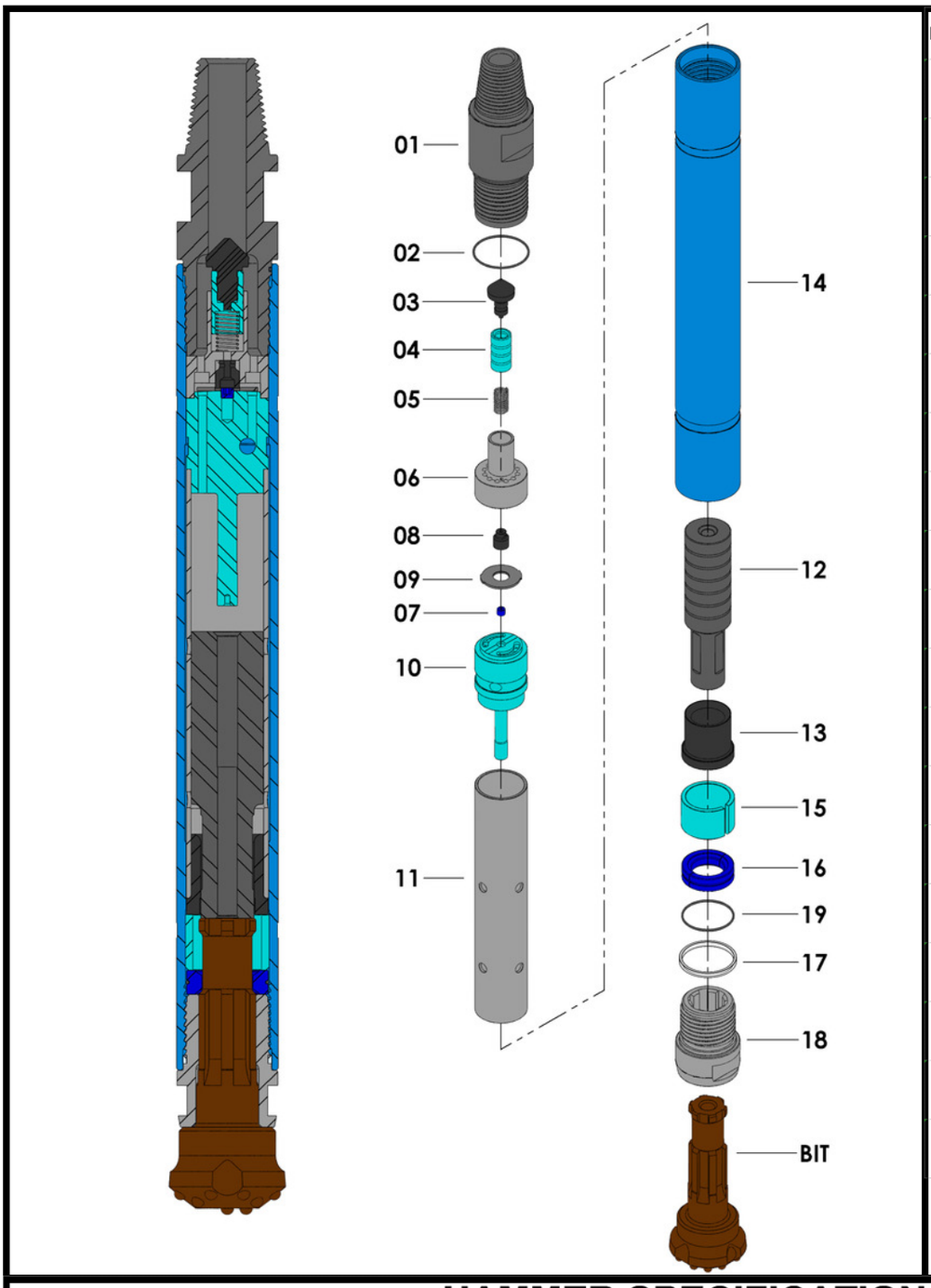

ITEM	ITEM DESCRIPTION	WEIGHT (kg)	WEIGHT (lb)	PART-No.
01	TOP SUB	4.41	9.72	TBR3-01
02	TOP SUB O'RING	0.00	0.00	TBR3-02
03	VALVE SEAL	0.02	0.04	TBR3-03
04	CHECK VALVE	0.11	0.24	TBR3-04
05	CHECK VALVE SPRING	0.01	0.02	TBR3-05
06	VALVE GUIDE	0.62	1.36	TBR3-06
07	PLUG	0.00	0.00	TBR3-07
08	CHOKE SET	0.03	0.07	TBR3-08
09	VALVE WASHER	0.04	0.08	TBR3-09
10	AIR DISTRIBUITOR	1.18	2.60	TBR3-10
11	INTERNAL CYLINDER	1.90	4.19	TBR3-11
12	PISTON	3.35	7.38	TBR3-12
13	GUIDED SLEEVE	0.64	1.41	TBR3-13
14	WEAR SLEEVE	7.65	16.86	TBR3-14
15	STOP RING	0.36	0.79	TBR3-15
16	BIT RETAINING RING	0.26	0.57	TBR3-16
17	SEALING RING	0.01	0.01	TBR3-17
18	DRIVE SUB	1.78	3.92	TBR3-18
19	BIT RET. RING O'RING	0.00	0.00	TBR3-19

HAMMER SPECIFICATIONS

LENGTH (WITHOUT BIT)	WEIGHT (WITHOUT BIT)	EXTERNAL DIAMETER	BIT SHANK	BIT RANGE	CONNECTION THREAD
768 mm 30,3 in	22 Kg 48.5 lb	Ø 82 mm Ø 3.1/4"	BULROCK 3	Ø 90 – Ø 110 mm Ø 3.1/2" - Ø 4.3/8"	API 2 3/8" REG (PIN)

WORKING PRESSURE	IMPACTE RATE	RECOMMENDED ROTATION SPEED	AIR CONSUPTION
100 – 254 PSI 6,9 – 17 BAR	25 Hz	25 – 40 rpm	140 – 285 CFM

TIGER CR3 - DTH Hammer

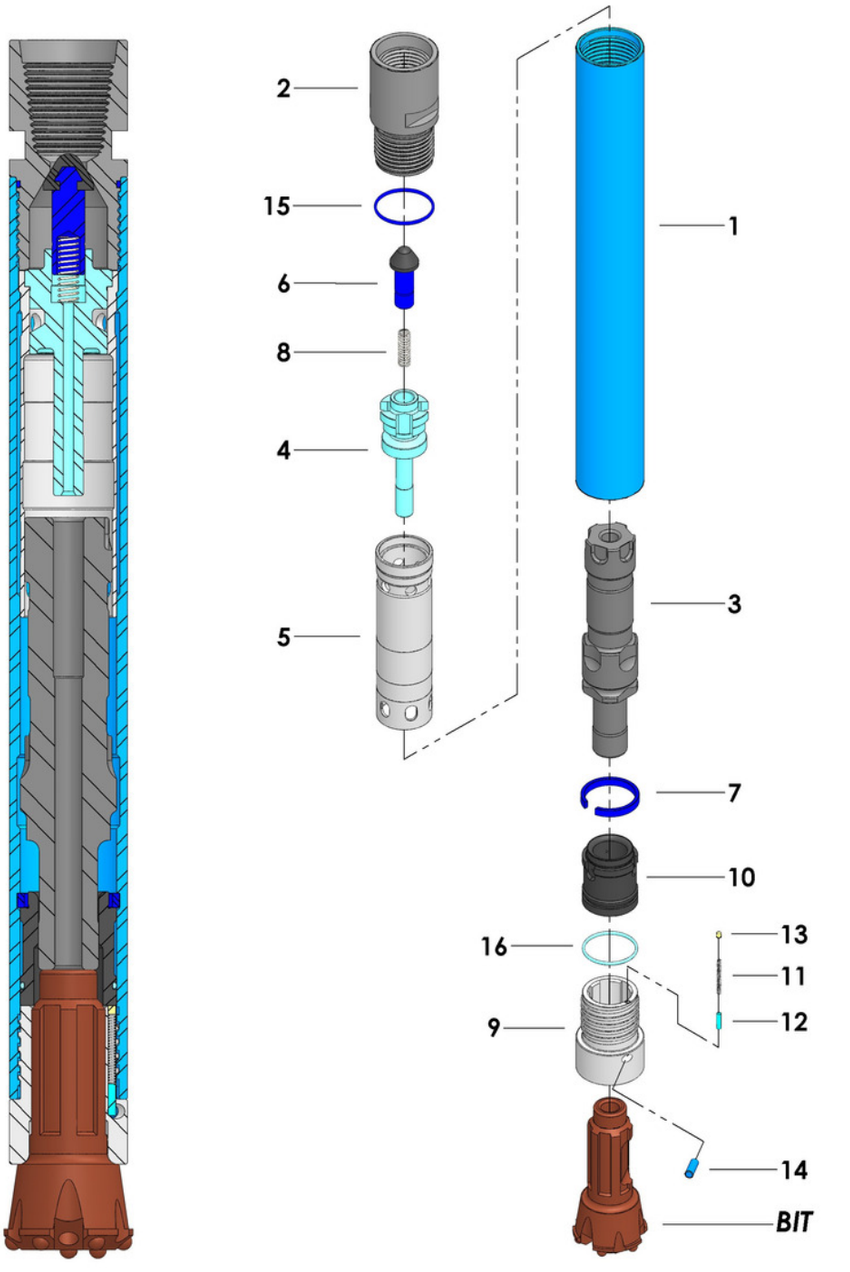

ITEM	ITEM DESCRIPTION:	WEIGHT (KG)	PART CODE
01	WEAR SLEEVE	7.375	TSCR3-01
02	TOP SUB	3.099	TSCR3-02
03	PISTON	4.940	TSCR3-03
04	AIR DISTRIBUTOR	0.925	TSCR3-04
05	CYLINDER	1.159	TSCR3-05
06	CHECK VALVE	0.177	TSCR3-06
07	STOP RING	0.069	TSCR3-07
08	CHECK VALVE SPRING	0.007	TSCR3-08
09	DRIVE SUB	1.764	TSCR3-09
10	GUIDED SLEEVE	0.923	TSCR3-10
11	STOP PIN SPRING	0.001	TSCR3-11
12	STOP PIN	0.004	TSCR3-12
13	STOPPER	0.001	TSCR3-13
14	BIT PIN	0.017	TSCR3-14
15	O'RING PARKER 2-231	0.002	TSCR3-15
16	O'RING PARKER 2-229	0.002	TSCR3-16

HAMMER SPECIFICATIONS

LENGTH (WITHOUT BIT)	WEIGHT (WITHOUT BIT)	EXTERNAL DIAMETER	BIT SHANK	BIT RANGE	CONNECTION THREAD
794 mm 31.3 in	24 Kg	Ø 80 mm Ø 3.15 in	CIR-90	Ø 3.3/4" - 4.3/4"	API 2.3/8" REG (BOX)

WORKING PRESSURE	IMPACTE RATE	RECOMMENDED ROTATION SPEED	AIR CONSUPTION
175 – 360 PSI 11,7 – 24 BAR	20 Hz	15 – 25 rpm	750 – 1400 CFM

TIGER HD4 - DTH Hammer

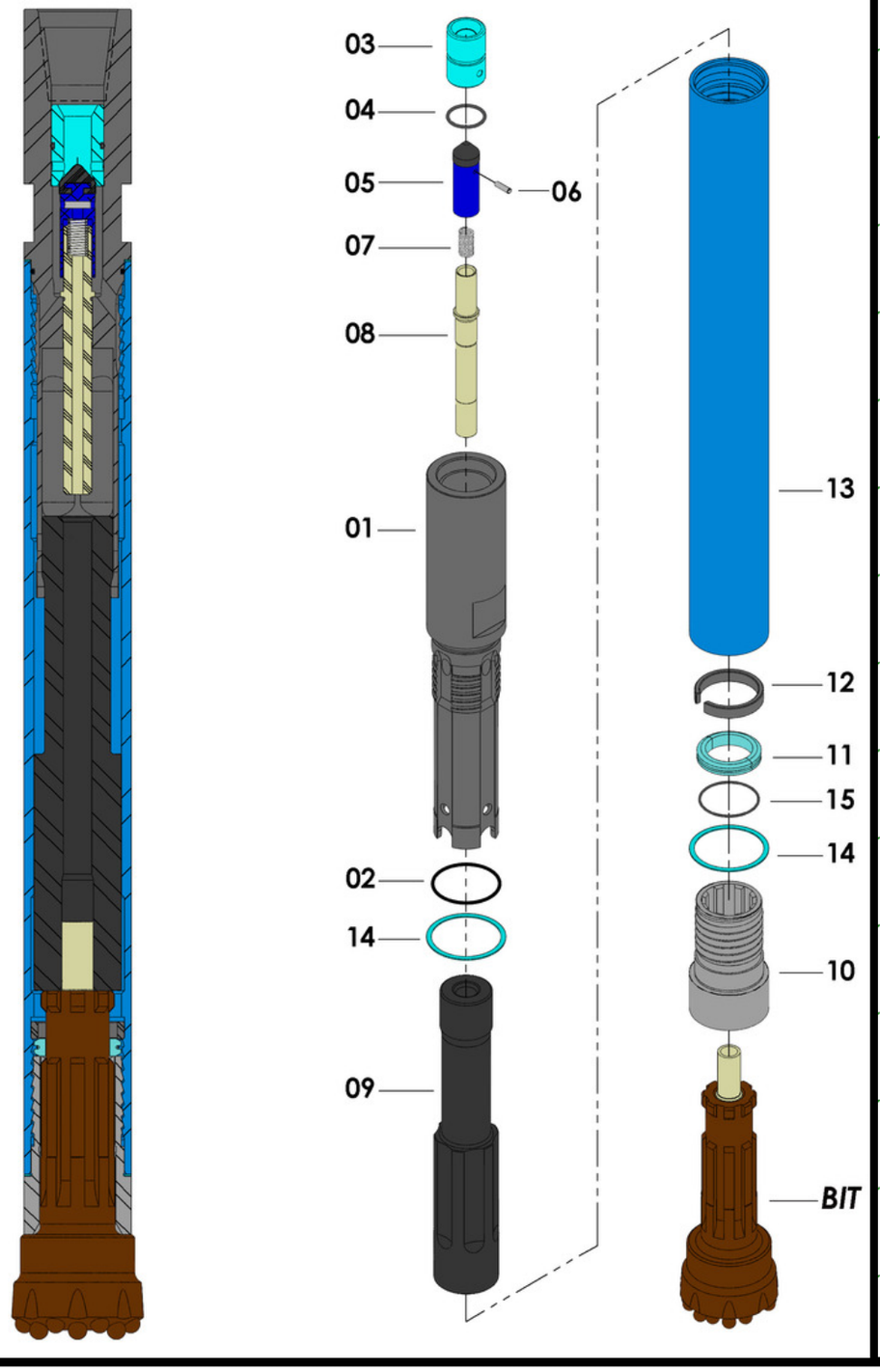

ITEM	ITEM DESCRIPTION	WEIGHT (kg)	WEIGHT (lb)	PART-No.
01	TOP SUB	13.30	29.32	THD4-01
02	TOP SUB O'RING	0.00	0.00	THD4-02
03	VALVE SEAT	0.56	1.23	THD4-03
04	VALVE SEAT O'RING	0.00	0.00	THD4-04
05	CHECK VALVE	0.10	0.21	THD4-05
06	PLUG	0.00	0.00	THD4-06
07	CHECK VALVE SPRING	0.02	0.04	THD4-07
08	GUIDE TUBE	0.12	0.27	THD4-08
09	PISTON	9.04	19.93	THD4-09
10	DRIVE SUB	2.56	5.63	THD4-10
11	BIT RETAINING RING	0.39	0.85	THD4-11
12	SNAP RING	0.10	0.22	THD4-12
13	WEAR SLEEVE	0.15	0.32	THD4-13
14	RETAINING WASHER	1.21	2.67	THD4-14
15	BIT RET. RING O'RING	0.02	0.04	THD4-15

HAMMER SPECIFICATIONS

LENGTH (WITHOUT BIT)	WEIGHT (WITHOUT BIT)	EXTERNAL DIAMETER	BIT SHANK	BIT RANGE	CONNECTION THREAD
1051 mm 41.4 in	38,5 Kg 84.8 Lb	92 mm 3.62 in	DHD – 340	Ø 4. 1/8" - Ø 5. 1/2"	API 2 3/8" REG (BOX)

WORKING PRESSURE	IMPACTE RATE	RECOMMENDED ROTATION SPEED	AIR CONSUPTION
82 – 350 PSI 5,5 – 23,5 BAR	27 Hz	25 – 40 rpm	182 – 780 CFM

TIGER MS4 - DTH Hammer

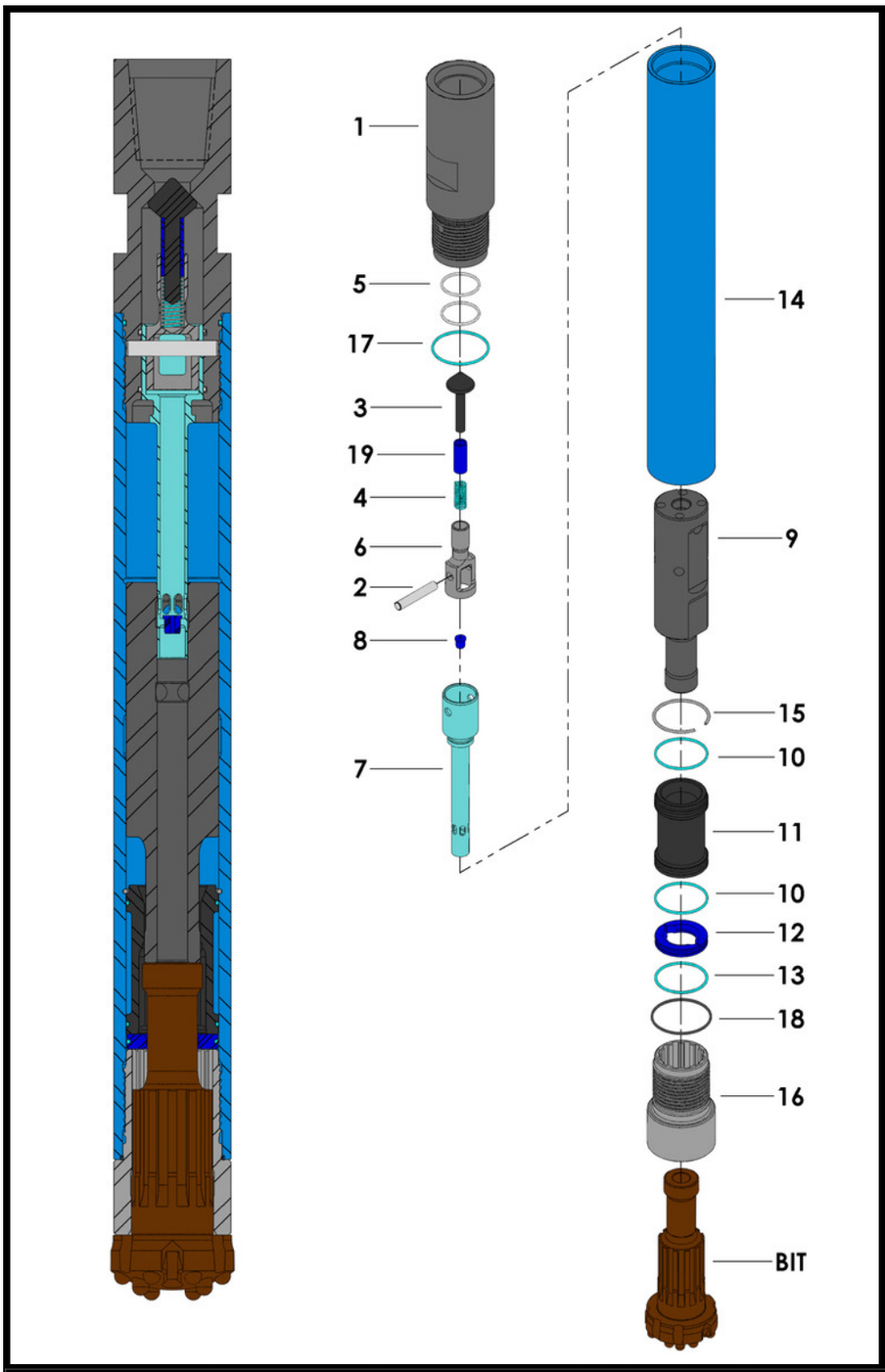

ITEM	ITEM DESCRIPTION	WEIGHT (kg)	WEIGHT (lb)	PART-No.
01	TOP SUB	10.15	22.38	TMS40-01
02	FEED TUBE RETAINER PIN	0.08	0.17	TMS40-02
03	CHECK VALVE	0.03	0.07	TMS40-03
04	CHECK VALVE O'RING	0.01	0.02	TMS40-04
05	TOP SUB O'RING	0.00	0.00	TMS40-05
06	CHECK VALVE GUIDE	0.27	0.59	TMS40-06
07	FEED TUBE	0.64	1.42	TMS40-07
08	CHOKE SET	0.00	0.01	TMS40-08
09	PISTON	7.06	15.56	TMS40-09
10	GUIDE SLEEVE O'RING (2 PCS)	0.00	0.00	TMS40-10
11	GUIDE SLEEVE	1.82	4.01	TMS40-11
12	BIT RETAINING RING	0.25	0.55	TMS40-12
13	BIT RET. RING O'RING	0.00	0.00	TMS40-13
14	WEAR SLEEVE	14.95	32.96	TMS40-14
15	PISTON RETAINER RING	0.02	0.05	TMS40-15
16	DRIVE SUB	3.16	6.97	TMS40-16
17	WEAR SLEEVE O'RING	0.00	0.00	TMS40-17
18	DRIVE SUB O'RING	0.00	0.00	TMS40-18
19	CHECK VALVE BEARING	0.06	0.13	TMS40-19

HAMMER SPECIFICATIONS

LENGTH (WITHOUT BIT)	WEIGHT (WITHOUT BIT)	EXTERNAL DIAMETER	BIT SHANK	BIT RANGE	CONNECTION THREAD
987 mm 39 in	39 kg 86 Lb	98 mm 3.86 in	MS-40	Ø 4.1/8" - Ø 5.1/2"	API 2.3/8" IF (BOX)

WORKING PRESSURE	IMPACTE RATE	RECOMMENDED ROTATION SPEED	AIR CONSUPTION
150 – 350 PSI 10 – 23,5 BAR	21 Hz	25 – 85 rpm	190 – 465 CFM

TIGER HD5 - DTH Hammer

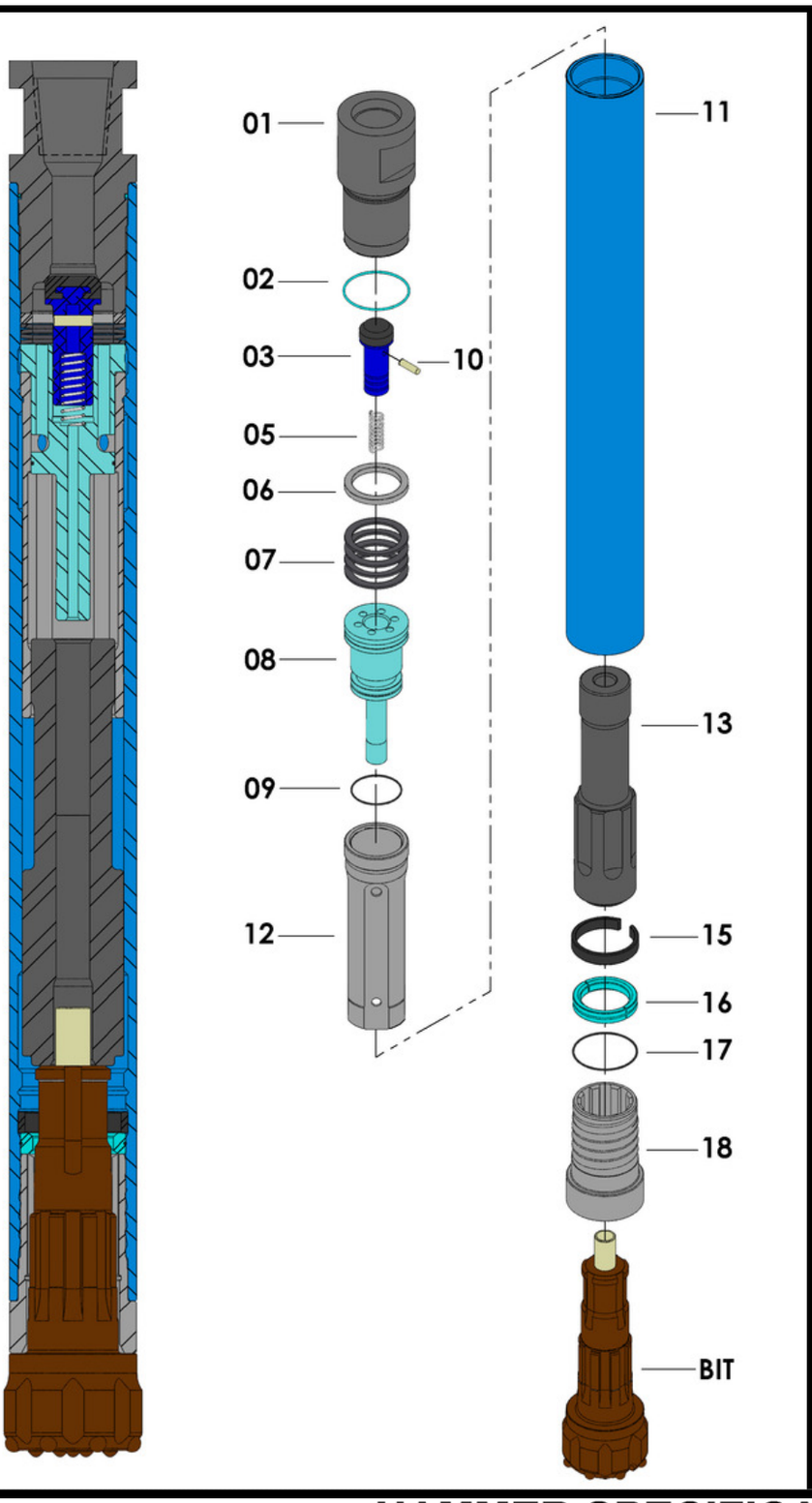

ITEM	ITEM DESCRIPTION	WEIGHT (kg)	WEIGHT (lb)	PART-No.
01	TOP SUB	10.99	24.23	THD5-01
02	TOP SUB O'RING	0.00	0.01	THD5-02
03	CHECK VALVE	0.26	0.56	THD5-03
05	CHECK VALVE SPRING	0.02	0.05	THD5-05
06	MAKE UP RING	0.21	0.46	THD5-06
07	SPRING WASHER	0.08	0.18	THD5-07
08	AIR DISTRIBUTOR	4.04	8.90	THD5-08
09	AIR DIST. O'RING	0.00	0.00	THD5-09
10	PLUG	0.00	0.01	THD5-10
11	WEAR SLEEVE	26.35	58.09	THD5-11
12	CYLINDER	3.82	8.42	THD5-12
13	PISTON	12.95	28.54	THD5-13
15	SNAP RING	0.25	0.55	THD5-15
16	BIT RETAINING RING	0.40	0.89	THD5-16
17	BIT RET. RING O'RING	0.00	0.00	THD5-17
18	DRIVE SUB	4.21	9.28	THD5-18

HAMMER SPECIFICATIONS

LENGTH (WITHOUT BIT)	WEIGHT (WITHOUT BIT)	EXTERNAL DIAMETER	BIT SHANK	BIT RANGE	CONNECTION THREAD
1073 mm 42.2 in	64 kg 141.1 lb	115.5 mm 4.55 in	DHD – 350	Ø 5.1/8" - Ø 6.1/2"	API 2. 3/8" IF (BOX)

WORKING PRESSURE	IMPACTE RATE	RECOMMENDED ROTATION SPEED	AIR CONSUPTION
150 – 300 PSI 10,3 – 20,7 BAR	25 Hz	20 – 35 rpm	300 – 750 CFM

TG.HD6 - DTH Hammer

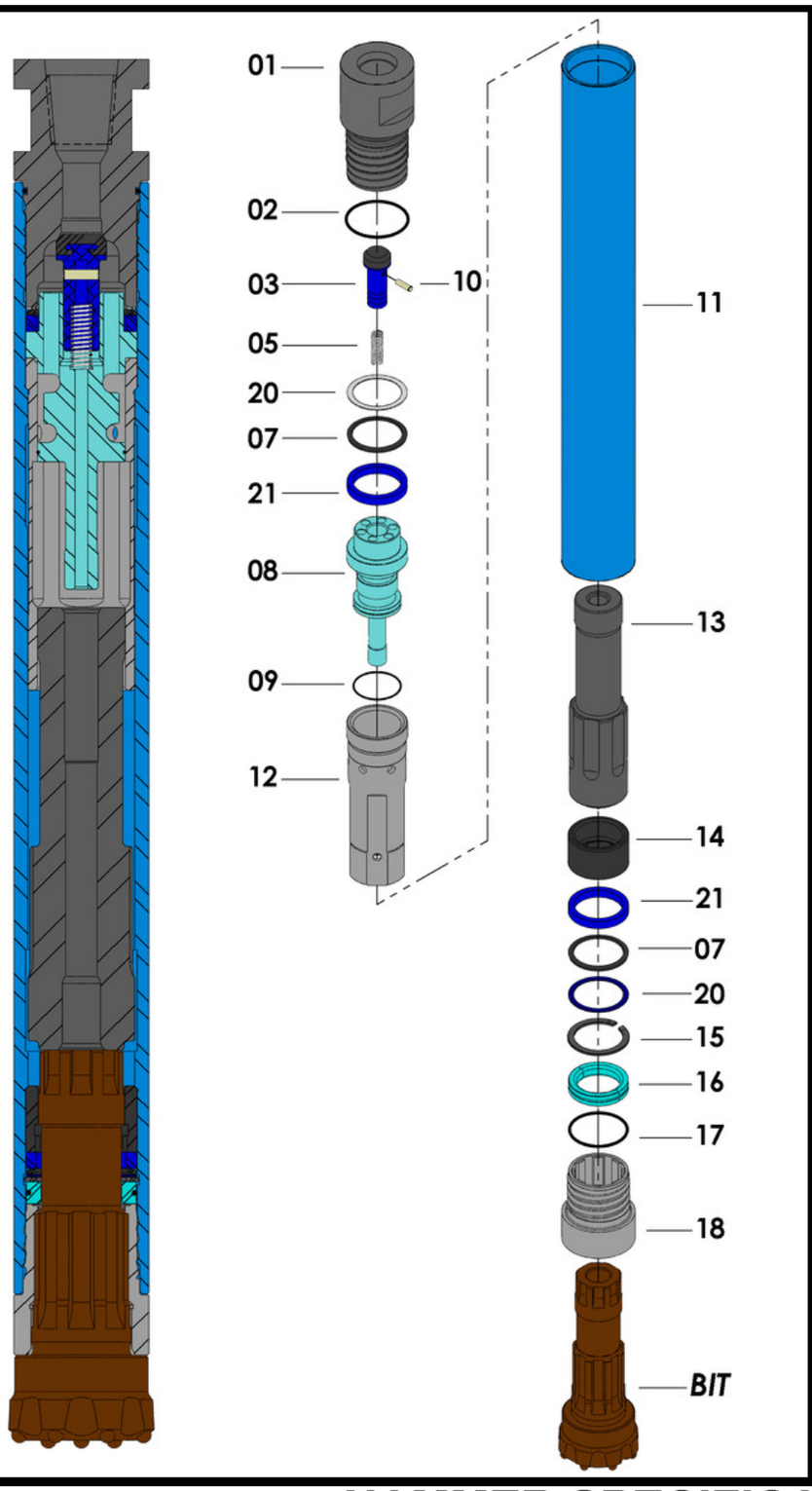

ITEM	ITEM DESCRIPTION	WEIGHT (kg)	WEIGHT (lb)	PART-No.
01	TOP SUB	18.21	40.15	THD6-01
02	TOP SUB O'RING	0.00	0.00	THD6-02
03	CHECK VALVE	0.31	0.69	THD6-03
05	CHECK VALVE SPRING	0.03	0.06	THD6-05
06	SPRING WASHER	0.17	0.37	THD6-06
07	MAKE UP RING	0.09	0.21	THD6-07
08	AIR DISTRIBUTOR	6.51	14.34	THD6-08
09	AIR DIST. O'RING	0.00	0.00	THD6-09
10	PLUG	0.00	0.00	THD6-10
11	WEAR SLEEVE	42.47	93.64	THD6-11
12	CYLINDER	6.09	13.42	THD6-12
13	PISTON	21.58	47.58	THD6-13
14	BIT BEARING	1.89	4.16	THD6-14
15	SNAP RING	0.17	0.36	THD6-15
16	BIT RETAINING RING	0.70	1.55	THD6-16
17	BIT RET. RING O'RING	0.00	0.00	THD6-17
18	DRIVE SUB	5.41	11.94	THD6-18
20	WASHER (2PCS)	0.17	0.37	THD6-20
21	MAKE UP RING 2	0.50	1.10	THD6-21

HAMMER SPECIFICATIONS

LENGTH (WITHOUT BIT)	WEIGHT (WITHOUT BIT)	EXTERNAL DIAMETER	BIT SHANK	BIT RANGE	CONNECTION THREAD
1306 mm 51.4 in	106 Kg 233.7 Lb	136.5 mm 5.37 in	DHD – 360	Ø 6” - 8 1/2”	API 2 3/8” IF (BOX)

WORKING PRESSURE	IMPACTE RATE	RECOMMENDED ROTATION SPEED	AIR CONSUPTION
150 – 350 PSI 10 – 23,5 BAR	23 Hz	20 – 30 rpm	358 – 938 CFM

TG.MS6 - DTH Hammer

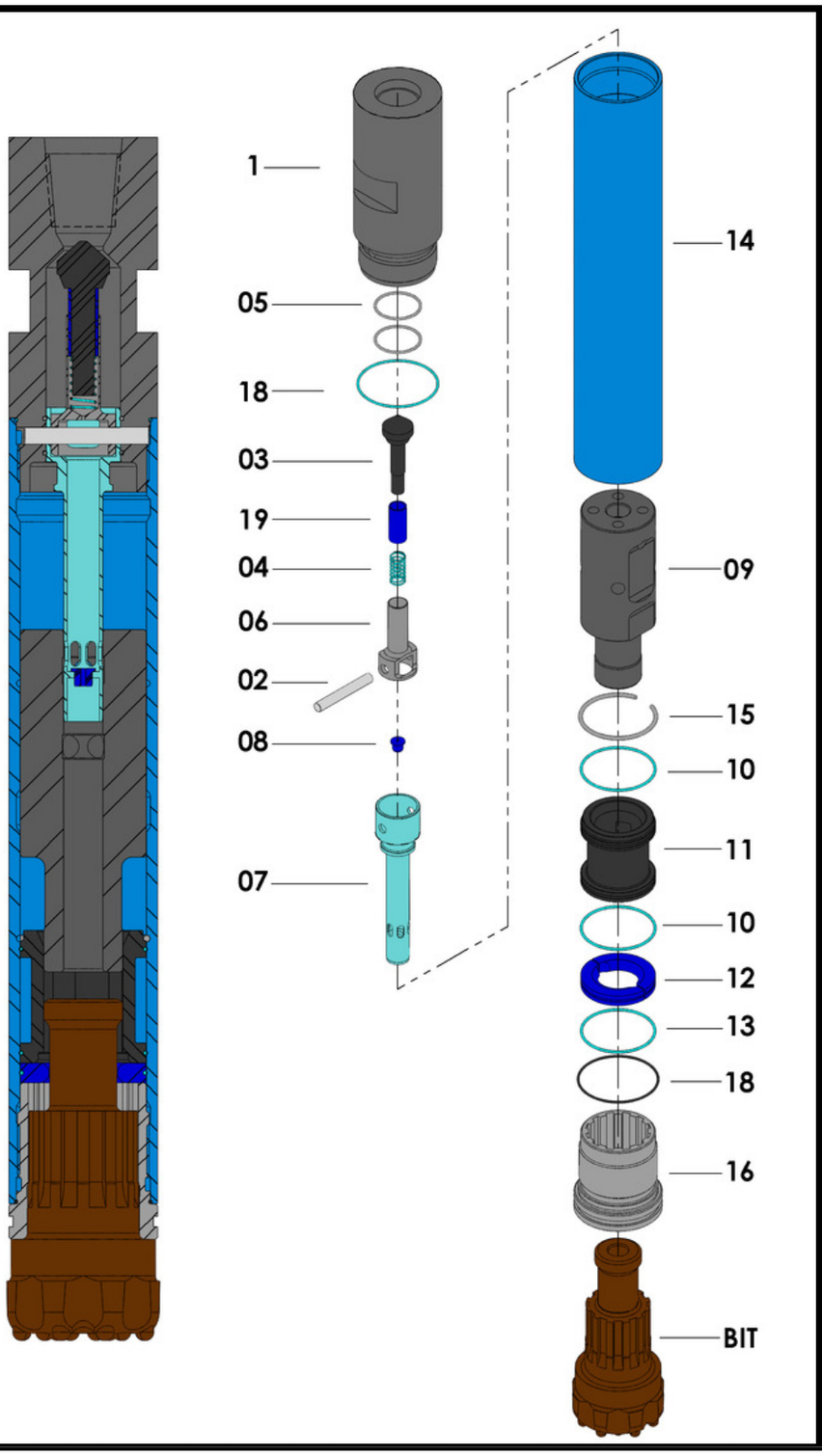

ITEM	ITEM DESCRIPTION	WEIGHT (kg)	WEIGHT (lb)	PART-No.
01	TOP SUB	28.36	62.52	TMS6-01
02	FEED TUBE RETAINER P	0.18	0.40	TMS6-02
03	CHECK VALVE	0.09	0.21	TMS6-03
04	CHECK VALVE O'RING	0.00	0.00	TMS6-04
05	TOP SUB O'RING	0.00	0.00	TMS6-05
06	CHECK VALVE GUIDE	0.39	0.86	TMS6-06
07	FEED TUBE	1.29	2.85	TMS6-07
08	CHOKE SET	0.01	0.01	TMS6-08
09	PISTON	17.17	37.86	TMS6-09
10	GUIDE SLEEVE O'RING (2	0.00	0.01	TMS6-10
11	GUIDE SLEEVE	4.17	9.19	TMS6-11
12	BIT RETAINING RING	1.01	2.23	TMS6-12
13	BIT RET. RING O'RING	0.00	0.01	TMS6-13
14	WEAR SLEEVE	24.05	53.02	TMS6-14
15	PISTON RETAINER RING	0.09	0.20	TMS6-15
16	DRIVE SUB	5.26	11.59	TMS6-16

HAMMER SPECIFICATIONS

LENGTH (WITHOUT BIT)	WEIGHT (WITHOUT BIT)	EXTERNAL DIAMETER	BIT SHANK	BIT RANGE	CONNECTION THREAD
1029 mm 40.5 in	82 Kg 180.8 Lb	141 mm 5.55 in	MS – 60	Ø 6" - 8 1/2"	API 2 3/8" IF (BOX)

WORKING PRESSURE	IMPACTE RATE	RECOMMENDED ROTATION SPEED	AIR CONSUPTION
150 – 350 PSI 10 – 23,5 BAR	23 Hz	30 – 40 rpm	343 – 972 CFM

TIGER SD6 - DTH Hammer

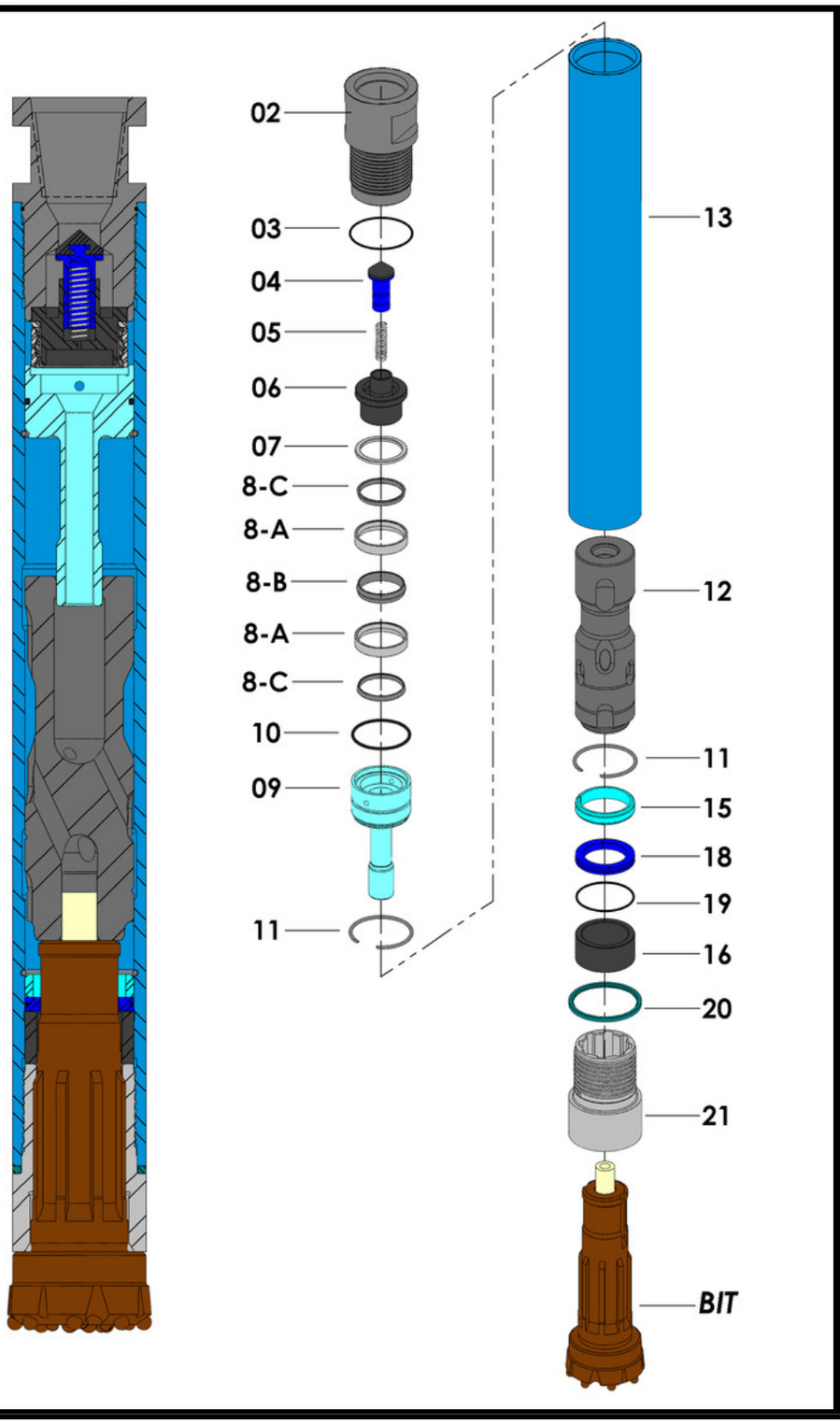

ITEM	ITEM DESCRIPTION	WEIGHT (kg)	WEIGHT (lb)	PART-No.
02	TOP SUB	16.90	37.26	TSD6-02
03	TOP SUB O'RING	0.00	0.01	TSD6-03
04	CHECK VALVE	0.34	0.75	TSD6-04
05	CHECK VALVE SPRING	0.03	0.06	TSD6-05
06	VALVE CAP	1.36	3.01	TSD6-06
07	COMPRESSION RING	0.12	0.27	TSD6-07
08A	STOP RING A (2 PC)	0.23	0.50	TSD6-08A
08B	STOP RING B	0.16	0.36	TSD6-08B
08C	STOP RING C (2 PC)	0.08	0.18	TSD6-08C
09	AIR DISTRIBUTOR	5.13	11.31	TSD6-09
10	AIR DISTRIBUTOR O'RING	0.01	0.02	TSD6-10
11	SNAP RING (2 PC)	0.07	0.15	TSD6-11
12	PISTON	21.70	47.84	TSD6-12
13	WEAR SLEEVE	37.43	82.52	TSD6-13
15	MAKE UP RING	0.48	1.06	TSD6-15
16	BIT BEARING	1.67	3.68	TSD6-16
18	BIT RET. RING (2 PC)	0.26	0.56	TSD6-18
19	BIT RET. O RING	0.00	0.01	TSD6-19
20	BREAKOUT WASHER	0.22	0.48	TSD6-20
21	DRIVE SUB	7.91	17.43	TSD6-21

HAMMER SPECIFICATIONS

LENGTH (WITHOUT BIT)	WEIGHT (WITHOUT BIT)	EXTERNAL DIAMETER	BIT SHANK	BIT RANGE	CONNECTION THREAD
1210 mm 48 in	94 Kg 207 lb	139 mm 5.1/2 in	SD – 6	Ø 6” - 8 1/2”	API 3 1/2” FH (BOX)

WORKING PRESSURE	IMPACTE RATE	RECOMMENDED ROTATION SPEED	AIR CONSUPTION
150 – 350 PSI 10 – 23,5 BAR	23 Hz	20 – 30 rpm	335 – 1060 CFM

TIGER QL6 - DTH Hammer

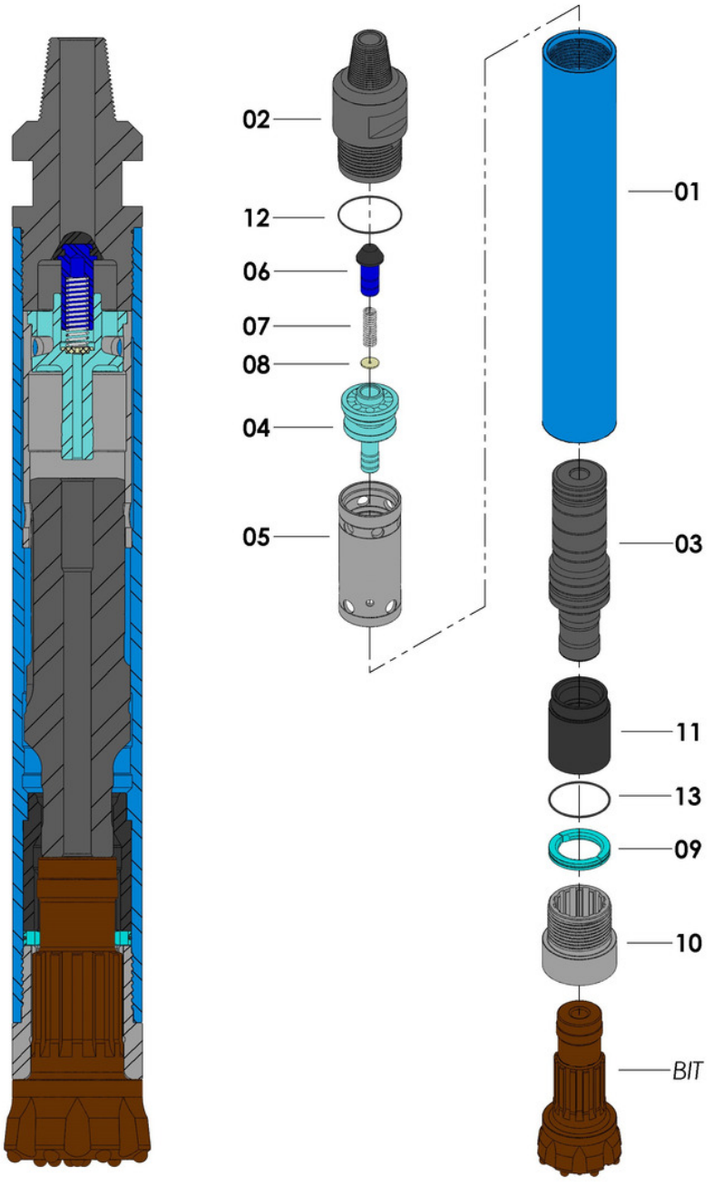

ITEM	ITEM DESCRIPTION	WEIGHT (kg)	WEIGHT (lb)	PART-No.
01	WEAR SLEEVE	35.16	77.51	TQL6-01
02	TOP SUB	21.46	47.31	TQL6-02
03	PISTON	25.64	56.53	TQL6-03
04	AIR DISTRIBUTOR	3.47	7.65	TQL6-04
05	INTERNAL CYLINDER	5.13	11.31	TQL6-05
06	CHECK VALVE	0.505	1.11	TQL6-06
07	CHECK VALVE SPRING	0.058	0.13	TQL6-07
08	CONDUIT	0.007	0.02	TQL6-08
09	BIT RETAINING RING	0.67	1.48	TQL6-09
10	DRIVE SUB	7.31	16.12	TQL6-10
11	GUIDED SLEEVE	5.85	12.90	TQL6-11
12	TOP SUB O'RING	0.003	0.01	TQL6-12
13	BIT RET. RING O'RING	0.004	0.01	TQL6-13

HAMMER SPECIFICATIONS

LENGTH (WITHOUT BIT)	WEIGHT (WITHOUT BIT)	EXTERNAL DIAMETER	BIT SHANK	BIT RANGE	CONNECTION THREAD
1.092 mm 42.3 in	105 kg 231.5 lb	147 mm 5.79 in	QL – 60	Ø 6. 1/8" - 8.1/2"	API 3.1/2" REG (PIN)

WORKING PRESSURE	IMPACTE RATE	RECOMMENDED ROTATION SPEED	AIR CONSUMPTION
150 – 350 PSI 10 – 23,5 BAR	23 Hz	15 – 60 rpm	353 – 1007 CFM

TIGER HD8 - DTH Hammer

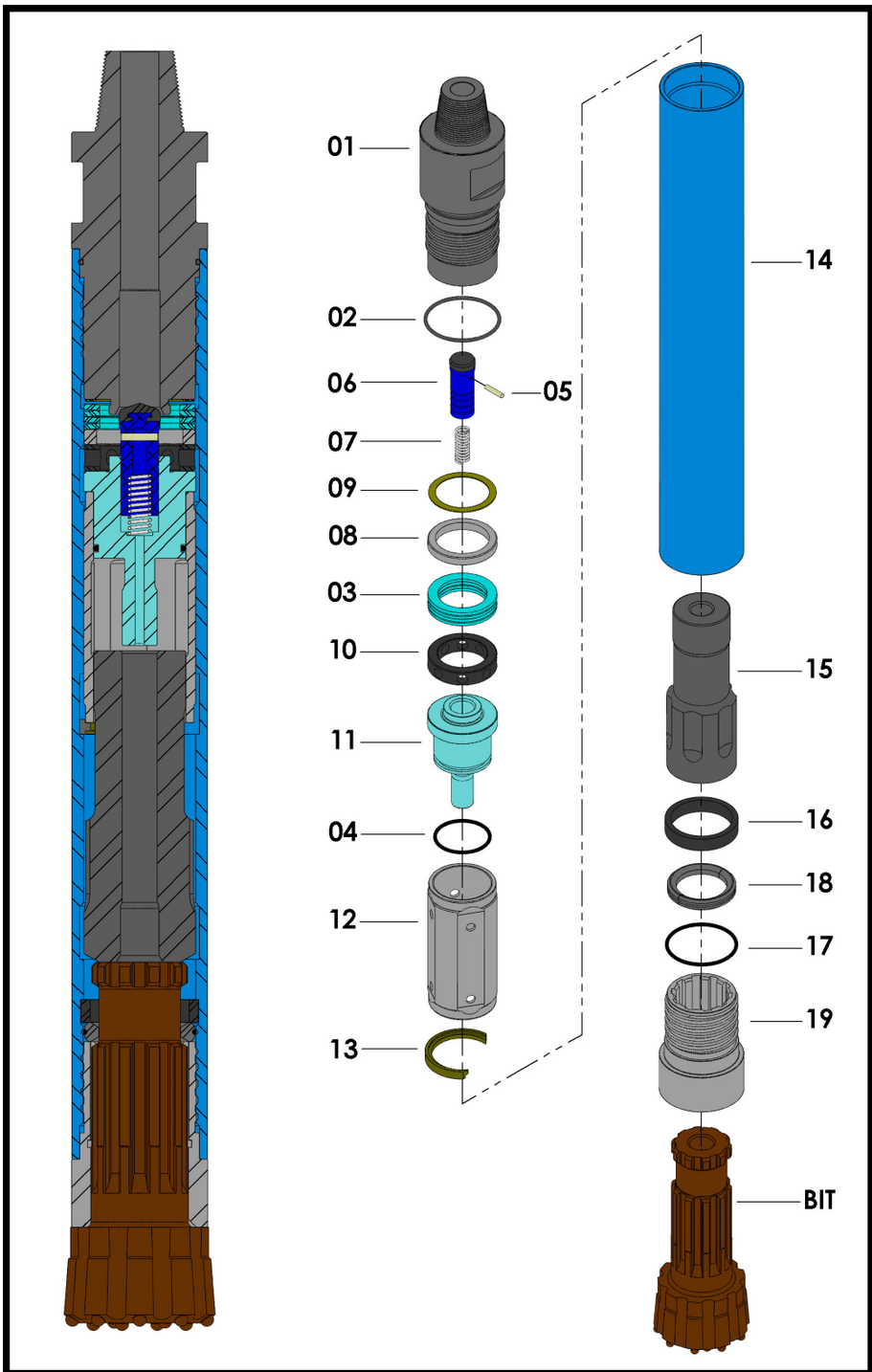

ITEM	ITEM DESCRIPTION	WEIGHT (kg)	WEIGHT (lb)	PART-No.
01	TOP SUB	57.00	125.66	THD8-01
02	TOP SUB O'RING	0.02	0.04	THD8-02
03	SPRING WASHER	0.45	0.99	THD8-03
04	AIR DIST. O'RING	0.01	0.03	THD8-04
05	PLUG	0.01	0.01	THD8-05
06	CHECK VALVE	0.53	1.18	THD8-06
07	CHECK VALVE SPRING	0.09	0.20	THD8-07
08	MAKE UP RING	1.04	2.29	THD8-08
09	WASHER	0.11	0.25	THD8-09
10	DISTRIBUTOR RING	1.71	3.78	THD8-10
11	AIR DISTRIBUTOR	11.98	26.41	THD8-11
12	CYLINDER	9.95	21.94	THD8-12
13	WEAR SLEEVE SNAP RING	0.49	1.08	THD8-13
14	WEAR SLEEVE	67.00	147.71	THD8-14
15	PISTON	37.77	83.27	THD8-15
16	PISTON SNAP RING	0.16	0.36	THD8-16
17	BIT RET. RING O'RING	0.02	0.04	THD8-17
18	BIT RETAINING RING	1.13	2.50	THD8-18
19	DRIVE SUB	15.93	35.12	THD8-19

HAMMER SPECIFICATIONS

LENGTH (WITHOUT BIT)	WEIGHT (WITHOUT BIT)	EXTERNAL DIAMETER	BIT SHANK	BIT RANGE	CONNECTION THREAD
1446 mm 57 in	208 Kg 458.6 Lb	180 mm 7.08 in	DHD – 380	Ø 8” - Ø 12”	API 4.1/2” REG (BOX)

WORKING PRESSURE	IMPACTE RATE	RECOMMENDED ROTATION SPEED	AIR CONSUPTION
150 – 350 PSI 10 – 23,5 BAR	20 Hz	20 – 30 rpm	600 – 1720 CFM

TIGER SD8 - DTH Hammer

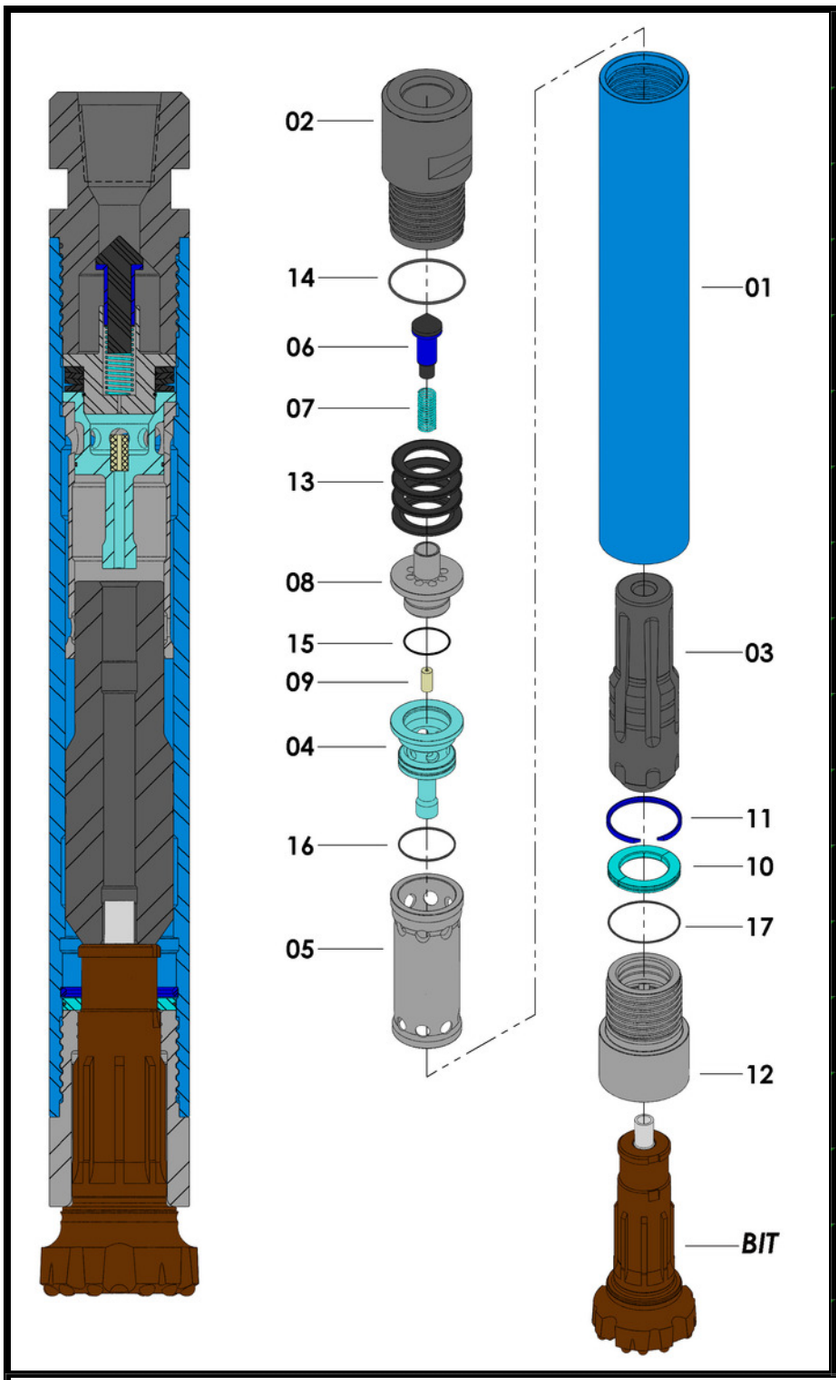

ITEM	ITEM DESCRIPTION:	WEIGHT (KG)	PART CODE
01	WEAR SLEEVE	70,15	TSD8-01
02	TOP SUB	33,37	TSD8-02
03	PISTON	33,13	TSD8-03
04	AIR DISTRIBUTOR	4,75	TSD8-04
05	CYLINDER	6,45	TSD8-05
06	CHECK VALVE	0,477	TSD8-06
07	CHECK VALVE SPRING	0,095	TSD8-07
08	VALVE CAP	3,52	TSD8-08
09	CONDUIT		TSD8-09
10	BIT RETAINING RING	0,95	TSD8-10
11	SNAP RING	0,2	TSD8-11
12	DRIVE SUB	18,18	TSD8-12
13	SPRING WASHER	0,438	TSD8-13
14	TOP SUB O'RING	0,001	TSD8-14
15	VALVE CAP O'RING	0,001	TSD8-15
16	AIR DISTRIBUTOR O'RING	0,001	TSD8-16
17	BIT RET. RING O'RING	0,001	TSD8-17

HAMMER SPECIFICATIONS

LENGTH (WITHOUT BIT)	WEIGHT (WITHOUT BIT)	EXTERNAL DIAMETER	BIT SHANK	BIT RANGE	CONNECTION THREAD
1381 mm 54 in	176 Kg 388 Lb	175 mm 6.89 in	SD – 8	Ø 8” - 12”	API 3 1/2” IF (BOX)
WORKING PRESSURE	**IMPACTE RATE**	**RECOMMENDED ROTATION SPEED**		**AIR CONSUPTION**	
175 – 360 PSI 11,7 – 24 BAR	20 Hz	15 – 25 rpm		750 – 1400 CFM	

TIGER QL8 - DTH Hammer

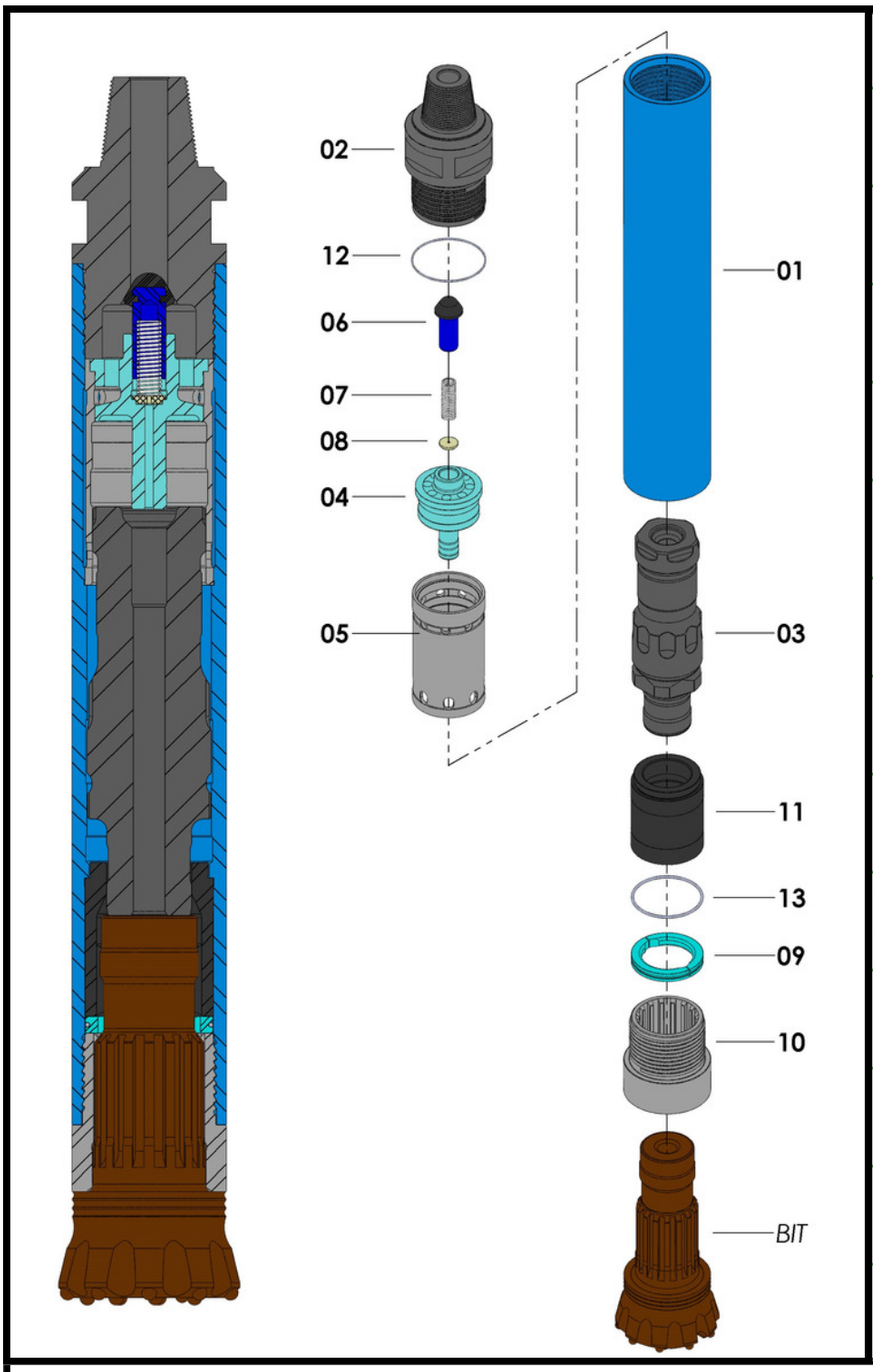

ITEM	ITEM DESCRIPTION	WEIGHT (kg)	WEIGHT (lb)	PART-No.
01	WEAR SLEEVE	66.47	146.54	TQL8-01
02	TOP SUB	36.73	80.97	TQL8-02
03	PISTON	44.78	98.72	TQL8-03
04	AIR DISTRIBUTOR	6.25	13.78	TQL8-04
05	INTERNAL CYLINDER	7.29	16.07	TQL8-05
06	CHECK VALVE	0.59	1.30	TQL8-06
07	CHECK VALVE SPRING	0.12	0.25	TQL8-07
08	CONDUIT	0.14	0.31	TQL8-08
09	BIT RETAINING RING	1.21	2.67	TQL8-09
10	DRIVE SUB	13.79	30.40	TQL8-10
11	GUIDED SLEEVE	10.71	23.61	TQL8-11
12	TOP SUB O'RING	0.00	0.01	TQL8-12
13	BIT RET. RING O'RING	0.01	0.02	TQL8-13

HAMMER SPECIFICATIONS

LENGTH (WITHOUT BIT)	WEIGHT (WITHOUT BIT)	EXTERNAL DIAMETER	BIT SHANK	BIT RANGE	CONNECTION THREAD
1.228 mm 48.35 in	188 kg 414.5 lb	185 mm 7.25 in	QL – 80	Ø 8” - 10”	API 4.1/2” REG (PIN)

WORKING PRESSURE	IMPACTE RATE	RECOMMENDED ROTATION SPEED	AIR CONSUMPTION
150 – 350 PSI 10 – 23,5 BAR	20 Hz	10 – 40 rpm	530 – 1200 CFM

Reverse Circulation Hammer CR42

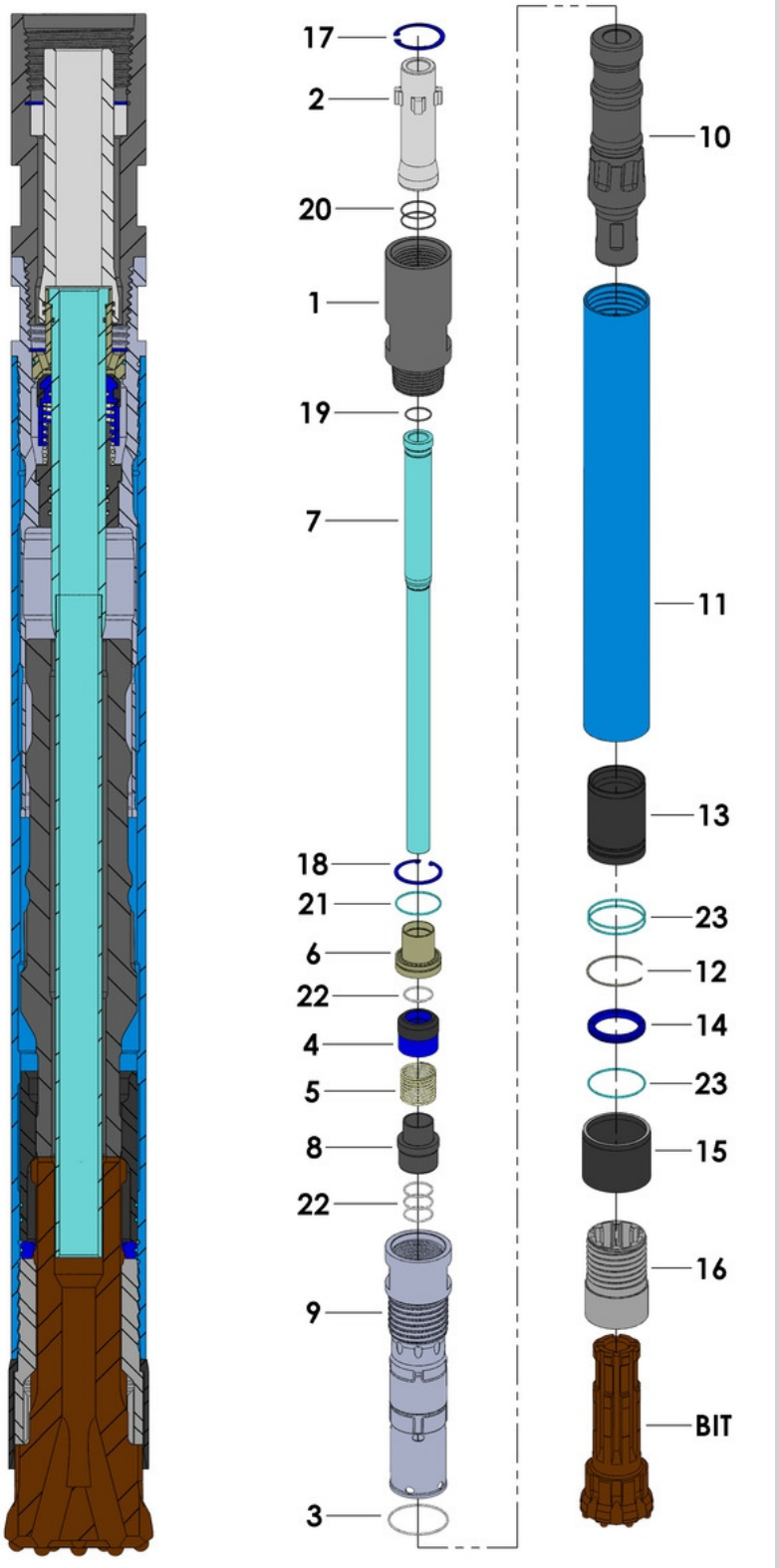

ITEM	ITEM DESCRIPTION	WEIGHT (KG)	NUMBER
1	TOP SUB	8,421	CR42-01
2	ADAPTOR SCREEN	2,617	CR42-02
3	O-RING PARKER 2-154	0,002	CR42-03
4	CHECK VALVE	0,384	CR42-04
5	(VALVE) SPRING	0,085	CR42-05
6	AIR DISTRIBUTOR	0,583	CR42-06
7	SAMPLE TUBE	3,119	CR42-07
8	MOUNT SAMPLE TUBE	0,856	CR42-08
9	LNNER CYLINDER	6,804	CR42-09
10	PISTON	11,728	CR42-10
11	WEAR SLEEVE	13,128	CR42-11
12	STOP RING	0,014	CR42-12
13	BUSH DRIVE SUB	2,499	CR42-13
14	BIT RET. RING	0,260	CR42-14
15	SHROUD	0,985	CR42-15
16	DRIVE SUB	2,733	CR42-16
17	CIRCLIP	0,028	CR42-17
18	CIRCLIP	0,025	CR42-18
19	O-RING PARKER 2-129	0,001	CR42-19
20	O-RING PARKER 2-138 (2 PÇS)	0,001	CR42-20
21	O-RING PARKER 2-149	0,001	CR42-21
22	O-RING PARKER 2-132 (4 PÇS)	0,001	CR42-22
23	O-RING PARKER 2-153 (3 PÇS)	0,002	CR42-23

DADOS TÉCNICOS

LENGTH (LESS BIT)	WEIGHT (LESS BIT)	DIAMETER	BIT SHANK	DRILLING RANGE	CONNECTION THREAD
1194 mm	54,3 Kg	Ø 110 mm	RE - 542	Ø 4.1/2" - Ø 5"	METZKE 4" (F)

WORKING PRESSURE	IMPACTE RATE	RECOMMENDED ROTATION SPEED	AIR CONSUMPTION
15 - 35 BAR	35 Hz	25 - 40 rpm	508 - 1016 PSI

Reverse Circulation Hammer CR54

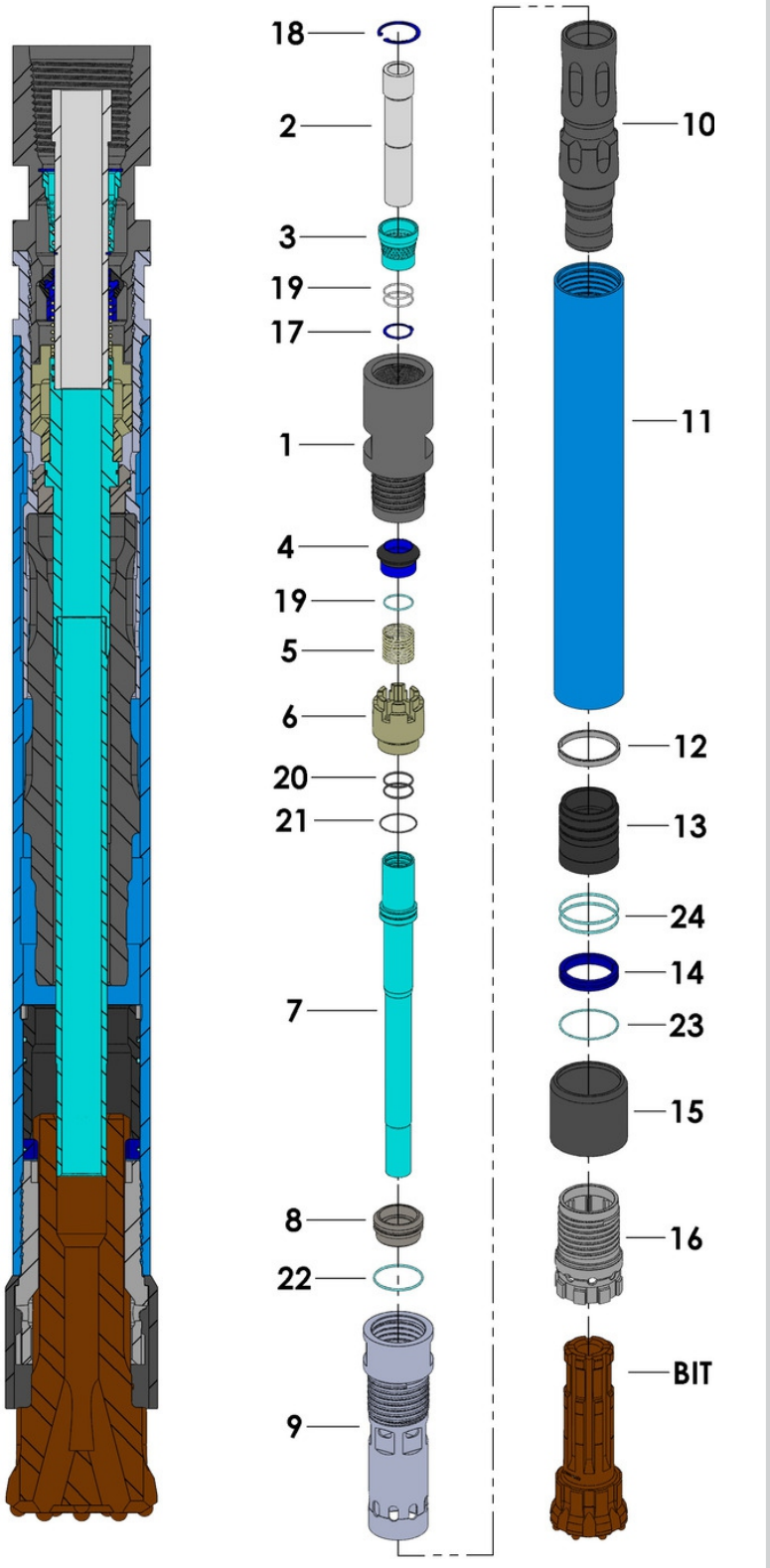

ITEM	ITEM DESCRIPTION	WEIGHT (KG)	NUMBER
1	TOP SUB	12,385	CR54-01
2	ADAPTOR SCREEN	2,073	CR54-02
3	AIR SCREEN	0,393	CR54-03
4	CHECK VALVE	0,340	CR54-04
5	(VALVE) SPRING	0,092	CR54-05
6	AIR DISTRIBUTOR	1,860	CR54-06
7	SAMPLE TUBE	5,899	CR54-07
8	MOUNT SAMPLE TUBE	1,044	CR54-08
9	LNNER CYLINDER	8,237	CR54-09
10	PISTON	16,983	CR54-10
11	WEAR SLEEVE	22,967	CR54-11
12	STOP RING	0,160	CR54-12
13	BUSH DRIVE SUB	2,652	CR54-13
14	BIT RET. RING	0,448	CR54-14
15	SHROUD	3,501	CR54-15
16	DRIVE SUB	5,124	CR54-16
17	CIRCLIP	0,010	CR54-17
18	CIRCLIP	0,025	CR54-18
19	O-RING PARKER 2-136 (3 PÇS)	0,001	CR54-19
20	O-RING PARKER 2-226 (2 PÇS)	0,002	CR54-20
21	O-RING PARKER 2-145	0,001	CR54-21
22	O-RING PARKER 2-237	0,003	CR54-22
23	O-RING PARKER 2-155	0,002	CR54-23
24	O-RING PARKER 2-243 (2 PÇS)	0,004	CR54-24

TECHNICAL DATA

LENGTH (LESS BIT)	WEIGHT (LESS BIT)	DIAMETER	BIT SHANK	DRILLING RANGE	CONNECTION THREAD
1252 mm	84 Kg	Ø 130 mm	PR - 54	Ø 5.1/2" - Ø 6"	METZKE 4.1/2" (F)

WORKING PRESSURE	IMPACTE RATE	RECOMMENDED ROTATION SPEED	AIR CONSUMPTION
15 - 35 BAR	35 Hz	25 - 40 rpm	508 - 1016 PSI